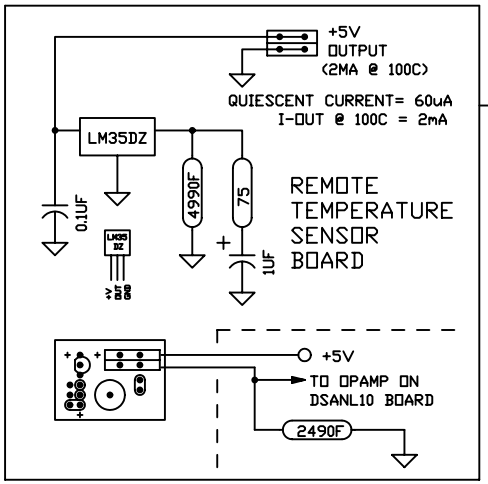

APPROX. A/D COUNT VS. TEMPERATURE
TEMPERATURE (C) = (A/D COUNT - 35)/10
0C = A/D COUNT = 35 (60uA)
25C = A/D COUNT = 285 (560uA)
50C = A/D COUNT = 535 (1.060mA)
75C = A/D COUNT = 785 (1.560mA)
98.8C = A/D COUNT = 1023 MAX.
STD. TEMP. INPUT SETTING

APPROX. A/D COUNT VS. TEMPERATURE
TEMRERATURE (C) = (A/D COUNT - 70)/20
0C = A/D COUNT = 70 (60uA)
25C = A/D COUNT = 570 (560uA)
47.6C = A/D COUNT = 1023 MAX.

FACTORY SETTING

ANALOG INPUT STAGE JUMPER SUMMARY							
GAIN A=2	GAIN A=20	Z-IN 0-10V	I-MODE 0-20mA	C/+5	MODE OF OPERATION	FULL SCALE	Z-IN
R	R	I	R	C	VOLTAGE IN	0-10V	133K
I	R	I	R	C	VOLTAGE IN	0-5V	133K
R	R	R	R	C	VOLTAGE IN	0-5V	200K
I	R	R	R	C	VOLTAGE IN	0-2.5V	200K
R	I	R	R	C	VOLTAGE IN	0-0.5V	200K
R	I	I	R	C	VOLTAGE IN	0-0.25V	133K
R	R	R	I	C	CURRENT IN	0-20mA	250
R	I	I	I	C	CURRENT IN	0-2.0mA	250
R	I	R	I	C	CURRENT IN	0-1.0mA	250
R	I	I	I	+5	CENT. TEMP.	0-100C	250
R	I	R	I	+5	CENT. TEMP.	0-50C	250

I = INSTALL JUMPER, R = REMOVE JUMPER
C = PIN TO COMMON, +5 = PIN TO +5VDC

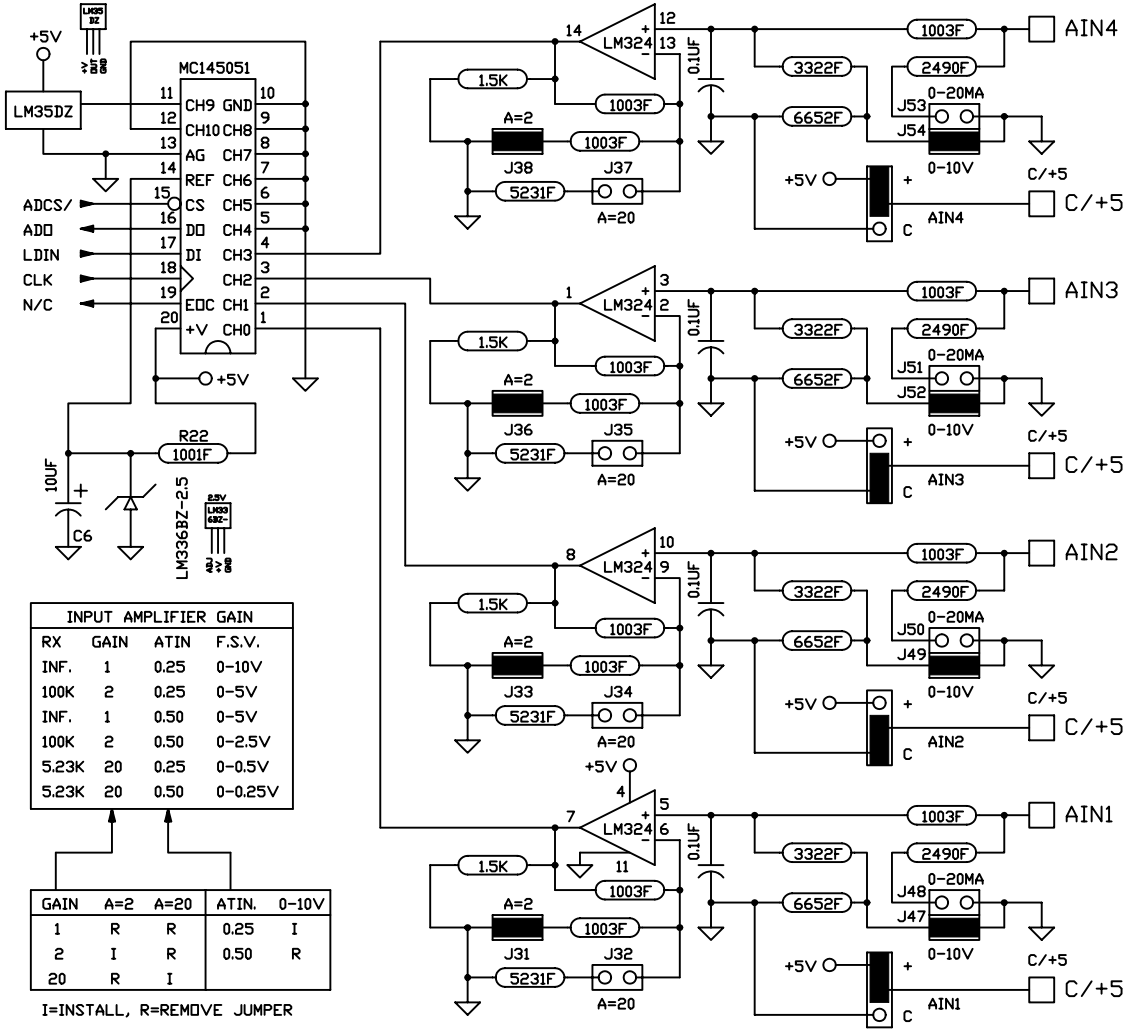

INPUT AMPLIFIER GAIN			
RX	GAIN	ATIN	F.S.V.
INF.	1	0.25	0-10V
100K	2	0.25	0-5V
INF.	1	0.50	0-5V
100K	2	0.50	0-2.5V
5.23K	20	0.25	0-0.5V
5.23K	20	0.50	0-0.25V

GAIN	A=2	A=20	ATIN.	0-10V
1	R	R	0.25	I
2	I	R	0.50	R
20	R	I		

I=INSTALL, R=REMOVE JUMPER

R.E. SMITH
4311 TYLERSVILLE ROAD
HAMILTON, OHIO 45011
513-874-4796
513-874-1236 Fax.

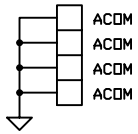

JUMPER INSTALLED (FACTORY SETTING)

MODEL AT444A

AT444CPU
AT444DIO
AT444AIN
AT444ASS

This drawing is the property of R. E. SMITH and shall not be used except with the written permission of R. E. SMITH, no copies shall be made of it and all proprietary rights in the matter contained in this drawing are the property of R. E. SMITH.
COPYRIGHT - R. E. SMITH, 1997

SHEET 1 OF 1	AT444AIN	DRAWN BY RES	SUBJECT ANALOG INPUTS
		DATE 9-13-95	FOR 4-IN, 4-RLY, 4-ANL
		SCALE NONE	RES R. E. SMITH 4311 TYLERSVILLE RD. HAMILTON, OHIO 45011
		CHKD. BY RES	DWG. NO. AT444AIN REV. A