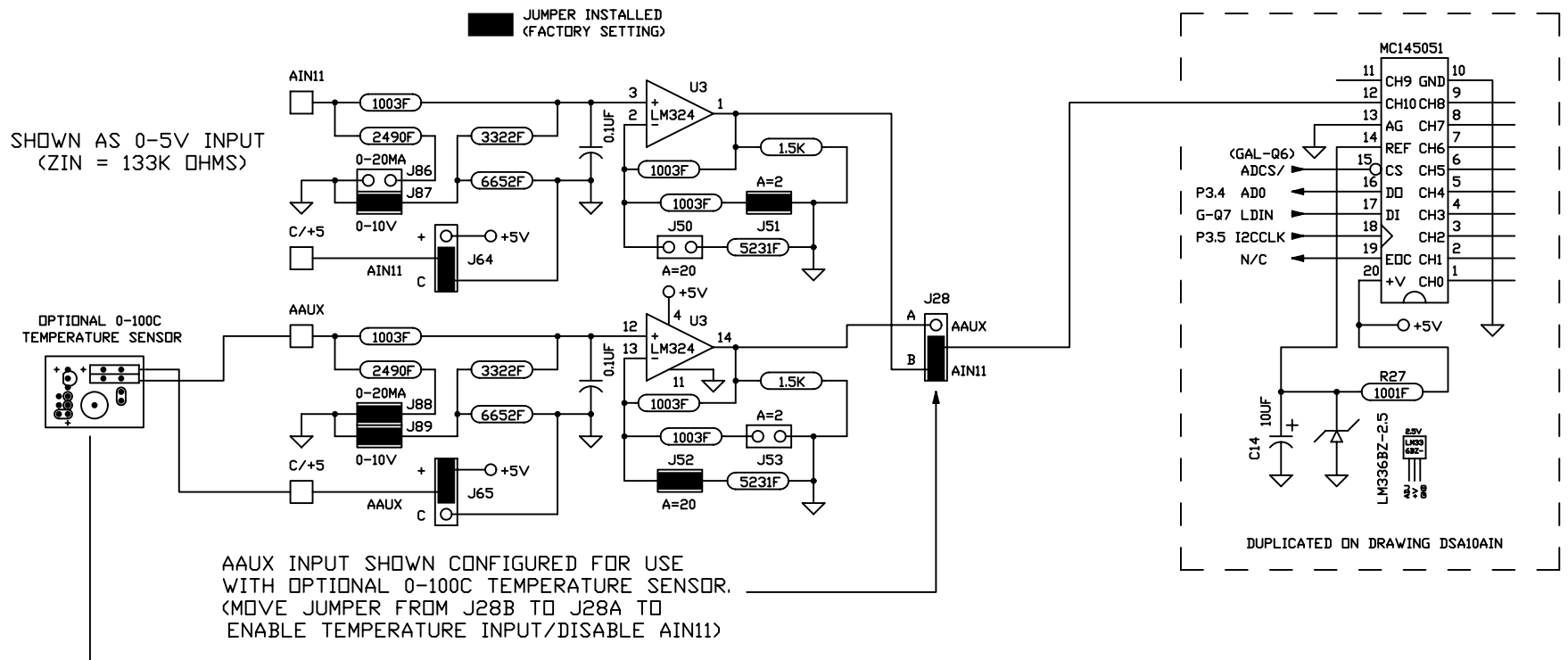

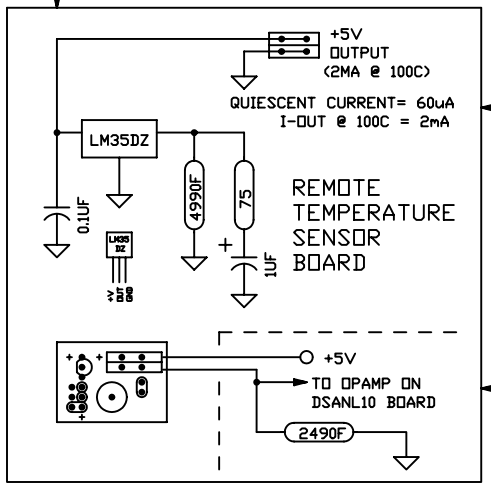

APPROX. A/D COUNT VS. TEMPERATURE
TEMPERATURE (C) = (A/D COUNT - 35)/10
0C = A/D COUNT = 35 (60uA)
25C = A/D COUNT = 285 (560uA)
50C = A/D COUNT = 535 (1.060mA)
75C = A/D COUNT = 785 (1.560mA)
98.8C = A/D COUNT = 1023 MAX.
STD. TEMP. INPUT SETTING

APPROX. A/D COUNT VS. TEMPERATURE
TEMRERATURE (C) = (A/D COUNT - 70)/20
0C = A/D COUNT = 70 (60uA)
25C = A/D COUNT = 570 (560uA)
47.6C = A/D COUNT = 1023 MAX.

ANALOG INPUT STAGE JUMPER SUMMARY

GAIN A=2	GAIN A=20	Z-IN 0-10V	I-MODE 0-20mA	C/+5	MODE OF OPERATION	FULL SCALE	Z-IN
R	R	I	R	C	VOLTAGE IN	0-10V	133K
I	R	I	R	C	VOLTAGE IN	0-5V	133K
R	R	R	R	C	VOLTAGE IN	0-5V	200K
I	R	R	R	C	VOLTAGE IN	0-2.5V	200K
R	I	R	R	C	VOLTAGE IN	0-0.5V	200K
R	I	I	R	C	VOLTAGE IN	0-0.25V	133K
R	R	R	I	C	CURRENT IN	0-20mA	250
R	I	I	I	C	CURRENT IN	0-2.0mA	250
R	I	R	I	C	CURRENT IN	0-1.0mA	250
R	I	I	I	+5	CENT. TEMP.	0-100C	250
R	I	R	I	+5	CENT. TEMP.	0-50C	250

I = INSTALL JUMPER, R = REMOVE JUMPER
C = PIN TO COMMON, +5 = PIN TO +5VDC

FACTORY SETTING

DSA10CPU
DSA10SIO
DSA10AIN
DSA10AUX
DSA10SS
DSA10WD

R.E. SMITH
4311 TYLERSVILLE ROAD
HAMILTON, OHIO 45011
(513) 874-4796

MODEL DSANL10

This drawing is the property of R. E. SMITH and shall not be used except with the written permission of R. E. SMITH, no copies shall be made of it and all proprietary rights in the matter contained in this drawing are the property of R. E. SMITH.
COPYRIGHT - R. E. SMITH, 1994

SHEET 1 OF 1	DSA10AUX	DRAWN BY RES	SUBJECT ANALOG INPUTS
		DATE 9-13-95	FOR 11-IN 10-BIT A/D
		SCALE NONE	RES R. E. SMITH 4311 TYLERSVILLE RD. HAMILTON, OHIO 45011
		CHKD. BY RES	DWG. NO. DSA10AUX REV. A