"THE PINGNATRON"

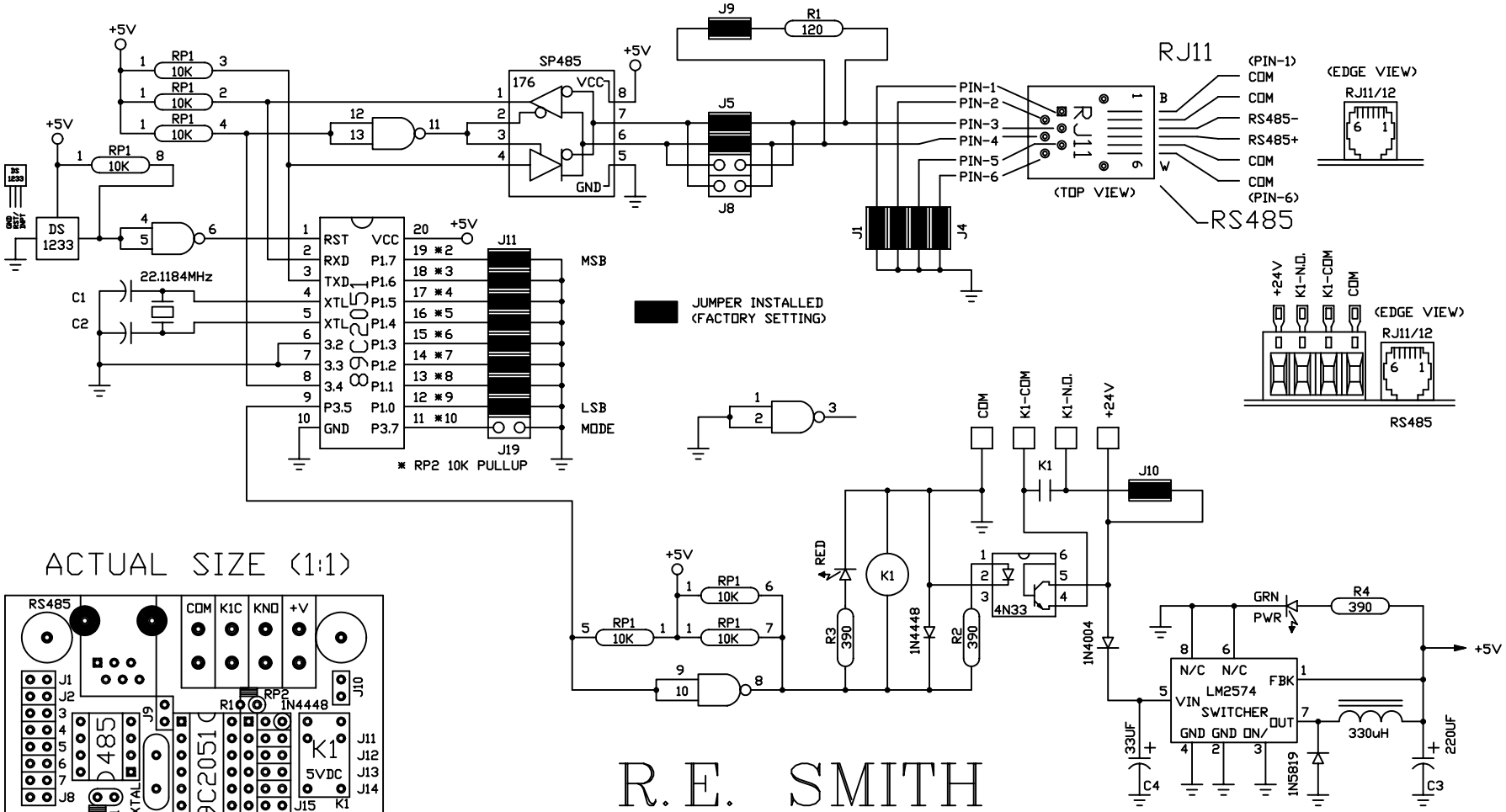

ACTUAL SIZE (1:1)

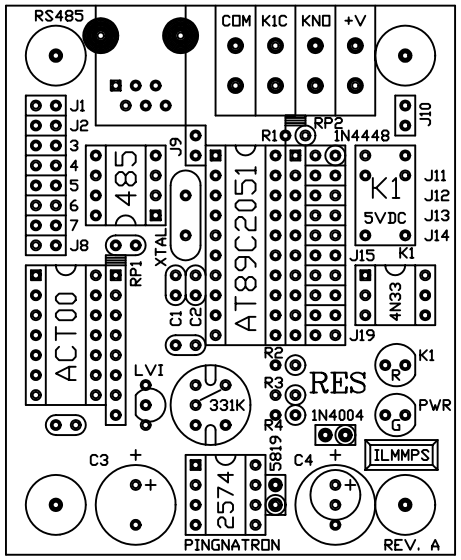

R.E. SMITH
4311 TYLERSVILLE ROAD
HAMILTON, OHIO 45011
513-874-4796
513-874-1236 Fax.

SOFTWARE NOTES:

1) MODE (J19) INSTALLED - UNIT WILL RESPOND TO LXX AND GXX COMMANDS AND TURN ON K1/4N33 OUTPUT FOR 1.0 SECOND. UNIT WILL ALSO RESPOND TO OTHER VALID COMMANDS.
2) MODE (J19) REMOVED - WHEN UNIT RECEIVES AN ASCII/BINARY CHARACTER THAT MATCHES THE BIT PATTERN OF J11 THRU J18 THE K1/4N33 OUTPUT WILL TURN ON FOR 1.0 SECOND.

This drawing is the property of R. E. SMITH and shall not be used except with the written permission of R. E. SMITH, no copies shall be made of it and all proprietary rights in the matter contained in this drawing are the property of R. E. SMITH.
COPYRIGHT - R. E. SMITH, 1999

SHEET 1 OF 1	PINGNA	DRAWN BY RES	SUBJECT PINGNATRON BOARD
		DATE 1-23-99	FOR RS485 TO DIGITAL
		SCALE NONE	RES R. E. SMITH 4311 TYLERSVILLE RD. HAMILTON, OHIO 45011
		CHKD. BY RES	DWG. NO. PINGNA REV. A