QUAD RS485 OPTO-ISOLATED REPEATER

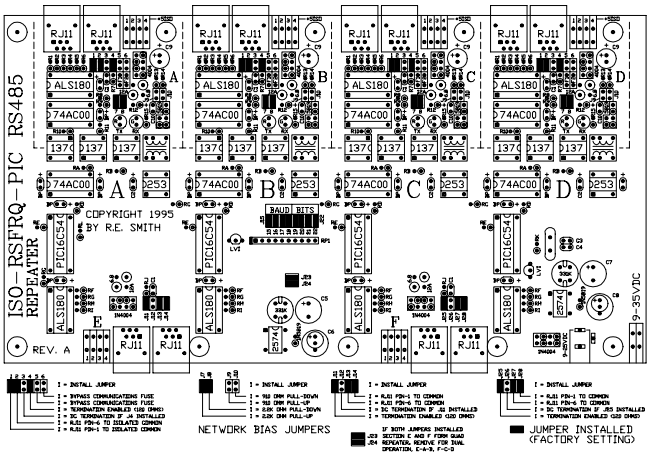

NOTE: REMOVE POWER TO CHANGE BAUD/BIT JUMPERS

USING THE IREFRQ AS AN ISOLATED RS422 TO RS422 REPEATER

REMOVE JUMPERS J23 & J24. REPEATER SECTIONS ARE NOW GROOPED INTO PAIRS A&B AS WELL AS C&D. USE ONE PAIR OF SECTIONS FOR EACH OF THE RS422 COMMUNICATIONS LINES. SEE DRAWING BELOW.

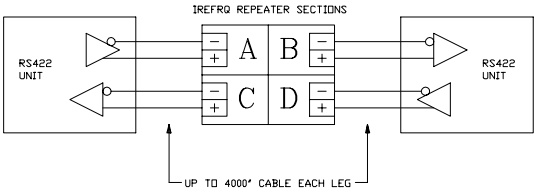

R.E. SMITH
4311 TYLERSVILLE ROAD
HAMILTON, OHIO 45011
(513) 874-4796

BAUD	J15	J16	J17	J18
300	REMOVE	REMOVE	REMOVE	REMOVE
600	REMOVE	REMOVE	REMOVE	INSTALL
1200	REMOVE	REMOVE	INSTALL	REMOVE
2400	REMOVE	REMOVE	INSTALL	INSTALL
4800	REMOVE	INSTALL	REMOVE	REMOVE
9600	REMOVE	INSTALL	REMOVE	INSTALL
19200	REMOVE	INSTALL	INSTALL	REMOVE
38400	REMOVE	INSTALL	INSTALL	INSTALL
57600	INSTALL	REMOVE	REMOVE	REMOVE
76800	INSTALL	REMOVE	REMOVE	INSTALL
115200	INSTALL	REMOVE	INSTALL	REMOVE
RESVD	INSTALL	REMOVE	INSTALL	INSTALL
RESVD	INSTALL	INSTALL	REMOVE	REMOVE
RESVD	INSTALL	INSTALL	REMOVE	INSTALL
RESVD	INSTALL	INSTALL	INSTALL	REMOVE
9600*	INSTALL	INSTALL	INSTALL	INSTALL

* FACTORY SETTING FOR 9600, N, 8, 1 WITH JUMPERS J10 THRU J13 IGNORED (XXXX) FOR ALL OTHER BAUD RATES REMOVE JUMPERS AS REQUIRED.

TOTAL BITS: START, PARITY, DATA, STOP					
BITS	J19	J20	J21	J22	EXAMPLE
6	REMOVE	REMOVE	REMOVE	REMOVE	
6-1/2	REMOVE	REMOVE	REMOVE	INSTALL	
7	REMOVE	REMOVE	INSTALL	REMOVE	
7-1/2	REMOVE	REMOVE	INSTALL	INSTALL	
8	REMOVE	INSTALL	REMOVE	REMOVE	
8-1/2	REMOVE	INSTALL	REMOVE	INSTALL	
9	REMOVE	INSTALL	INSTALL	REMOVE	N, 7, 1
9-1/2	REMOVE	INSTALL	INSTALL	INSTALL	
10	INSTALL	REMOVE	REMOVE	REMOVE	N, 8, 1 (P, 7, 1)
10-1/2	INSTALL	REMOVE	REMOVE	INSTALL	
11	INSTALL	REMOVE	INSTALL	REMOVE	N, 8, 2 (P, 8, 1)
11-1/2	INSTALL	REMOVE	INSTALL	INSTALL	
12	INSTALL	INSTALL	REMOVE	REMOVE	
12-1/2	INSTALL	INSTALL	REMOVE	INSTALL	
13	INSTALL	INSTALL	INSTALL	REMOVE	
13-1/2	INSTALL	INSTALL	INSTALL	INSTALL	

NOTES: AT 115.2K BAUD THE START BIT ERROR IS UNDER 200NS (2.5%), THE END OF CHARACTER UNCERTANTY IS APPROXIMATELY 2.0USEC.

MODEL IRSFRQ

(PREVIOUSLY MODEL# ISO-RSFRQ-PIC OR IRSFRQ-PIC)

This drawing is the property of R. E. SMITH and shall not be used except with the written permission of R. E. SMITH, no copies shall be made of it and all proprietary rights in the matter contained in this drawing are the property of R. E. SMITH.
COPYRIGHT - R. E. SMITH 1996

DRAWN BY RES	SUBJECT	RS232/RS485	
DATE 12-7-96	FOR	QUAD ISO CONV/REPT	
SCALE NONE	RES R. E. SMITH 4311 TYLERSVILLE RD. HAMILTON, OHIO 45011	DWG. NO. IRSFRQ22	REV. A
CHKD. BY RES			
SHEET 1 OF 1	IRSFRQ22		